S	100	150	200	250	300
A	256	306	356	406	456

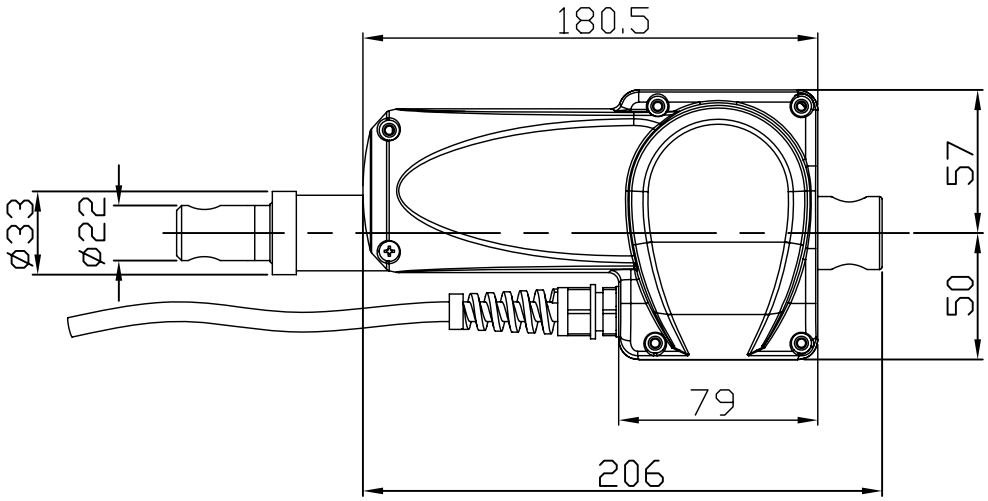

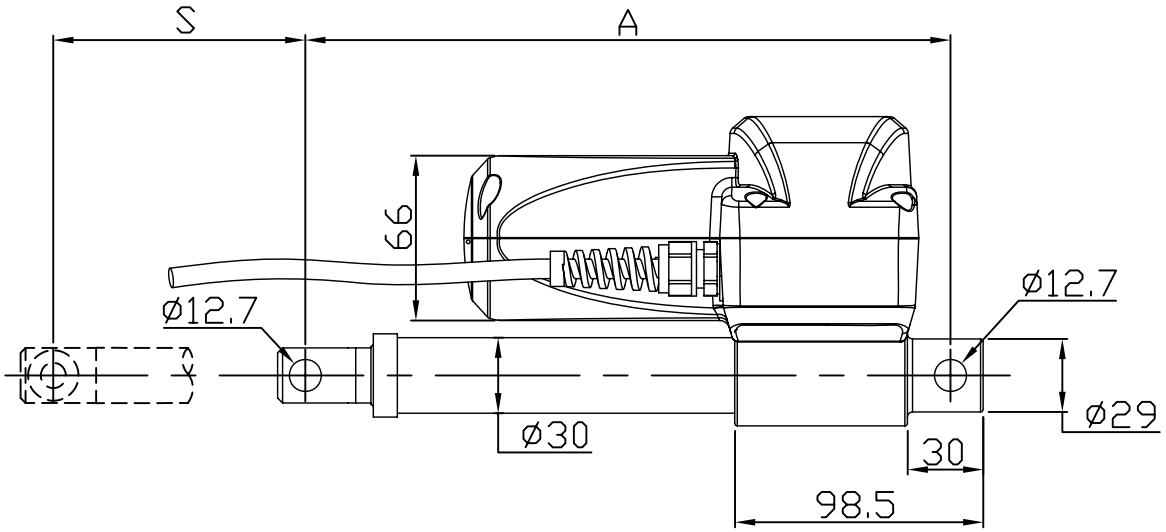

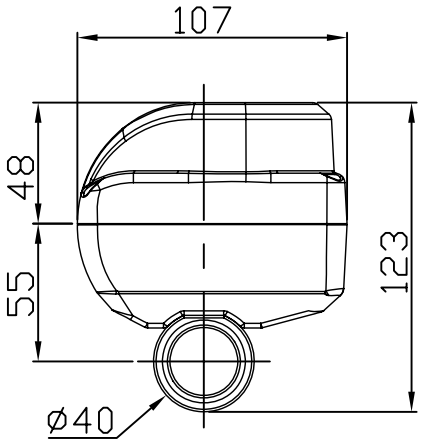

MOTECK ELECTRIC CORP
MOTECK®
MOTORIZE OUR WORLD

DATE: 14 April 2014

TITLE: Linear Actuator MD52